AQVA Kimono 1300

FOUR PERSON · FRESH-FILL HOT TUB



SPECIFICATIONS

Footprint	1300 × 1300 mm = 1.69 m²
Seating	Four people
Height	820 mm as an insert, 905 mm freestanding
Water	About 550 L of fresh water each use
Between uses	Drained after use
Jets	28 stainless-steel hydrotherapy jets (spa configuration)
Power	Two 10 A supplies
Dry weight	About 90 kg
Outdoor use	Yes, UV-stable gelcoat
Surface	Medical-grade silk surface
Made in	Melbourne

SHELL

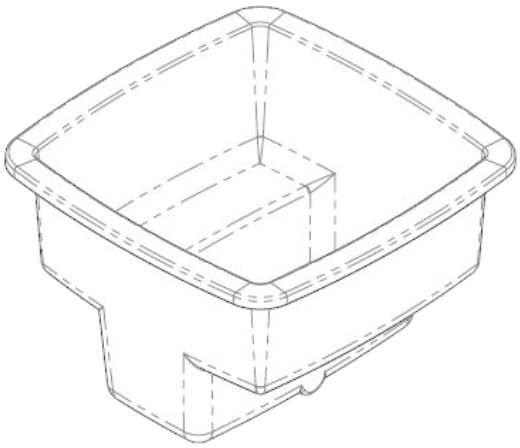

Kimono 1300 shell, isometric view

FOOTPRINT

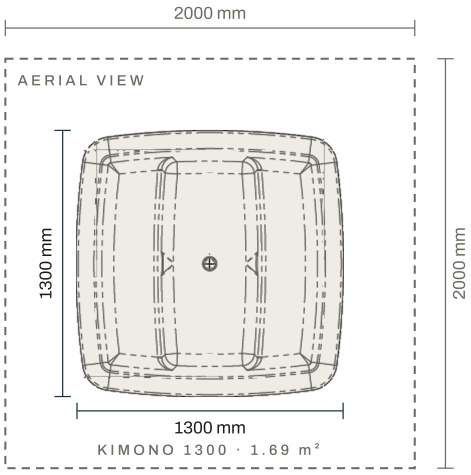

Conventional spa, 2 × 2 m = 4 m² (example)

Plan view, to scale. The 2 × 2 m conventional spa is an example size.

Made in Melbourne.

Made in Melbourne, made to order, and backed by a 15-year domestic warranty on insert baths (10 years freestanding) with national after-sales support and spare parts held locally.

Installation requires appropriately licensed trades, including a licensed plumber. Full specifications, drawings and lead time are confirmed in writing with your quote.